ITEM NO.	PART NUMBER	DESCRIPTION	QTY.
1	10536/00	POST TOWEL BARS, BEADED SERIES	2
2	10972/00	HUB, TRANSITIONAL 3RING	2
3	10973/00	ESCUTCHEON, BEADED HANDLE	2
4	2-104	MOUNTING KIT WITH BROACH	2
4.1	11050	MOUNTING KIT, WALL FLANGE	1
4.2	11083	EXTENSION BROACH FOR MOUNTING KIT	1
4.3	92043	SCREW, FLAT HD #10 SIZE W/ #2 PHIL DRIVE, 2"L	1
4.4	92046	ANCHOR SCREW 3/8" HOLE, TOGGLER AF10	1
4.5	92248	SET CREW, CUP POINT 8-32 UNC, 1/8" L.	1
5	92163	SET SCREW, CONE PT 8-32 X 1/8"L	2
6	P23074/00	24" KLD TOWEL BAR	1
7	P39001	HEX KEY 5/64, FOR 8-32 SET SCREW	1

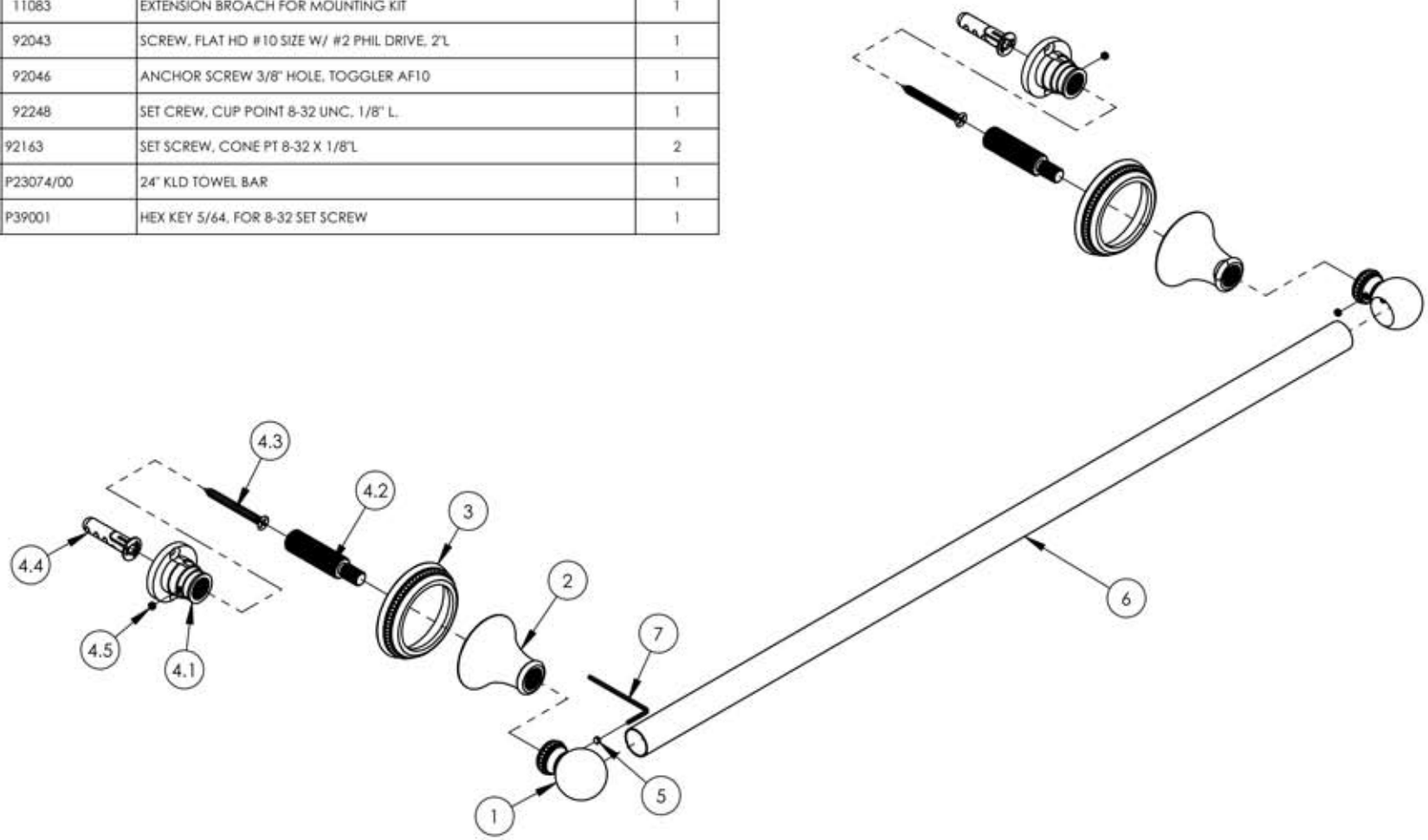

ZONE	REV.	DESCRIPTION	DATE	APPROVED

REVISIONS

1261 LOGAN AVENUE
COSTA MESA, CALIFORNIA 92626

PHONE: 714.361.4800
FAX: 714.617.3120

PHYLRICH®

Defining Luxury Since 1959

PROPRIETARY AND CONFIDENTIAL

THE INFORMATION CONTAINED IN THIS DRAWING IS THE SOLE PROPERTY OF RSS MANUFACTURING. ANY REPRODUCTION IN PART OR AS A WHOLE WITHOUT THE WRITTEN PERMISSION OF RSS MANUFACTURING IS PROHIBITED.

-	-
-	-
-	-
NEXT ASSY	USED ON
APPLICATION	
MATERIAL	
FINISH	

DO NOT SCALE DRAWING

INTERPRET GEOMETRIC DIMENSIONING & TOLERANCING IN ACCORDANCE WITH ASME Y14.5-2009 & ASME Y14.41-2003 STANDARDS. UNLESS OTHERWISE SPECIFIED, DIMENSIONS ARE IN INCHES. TOLERANCES ARE:

FRACTIONS	DECIMALS	ANGULAR
±1/64"	X.X: ±.1 X.XX: ±.01 X.XXX: ±.005	±.5°

	NAME	DATE
DRAWN	LLO	10/2/2015
CHECKED	GRE	3/25/2014

24" TOWEL BAR, BEADED SERIES

SIZE	ASM/PRT NO.	REV
A	207-71/00	-

SCALE: 1:4 | WEIGHT: lbs. | SHEET 1 OF 2